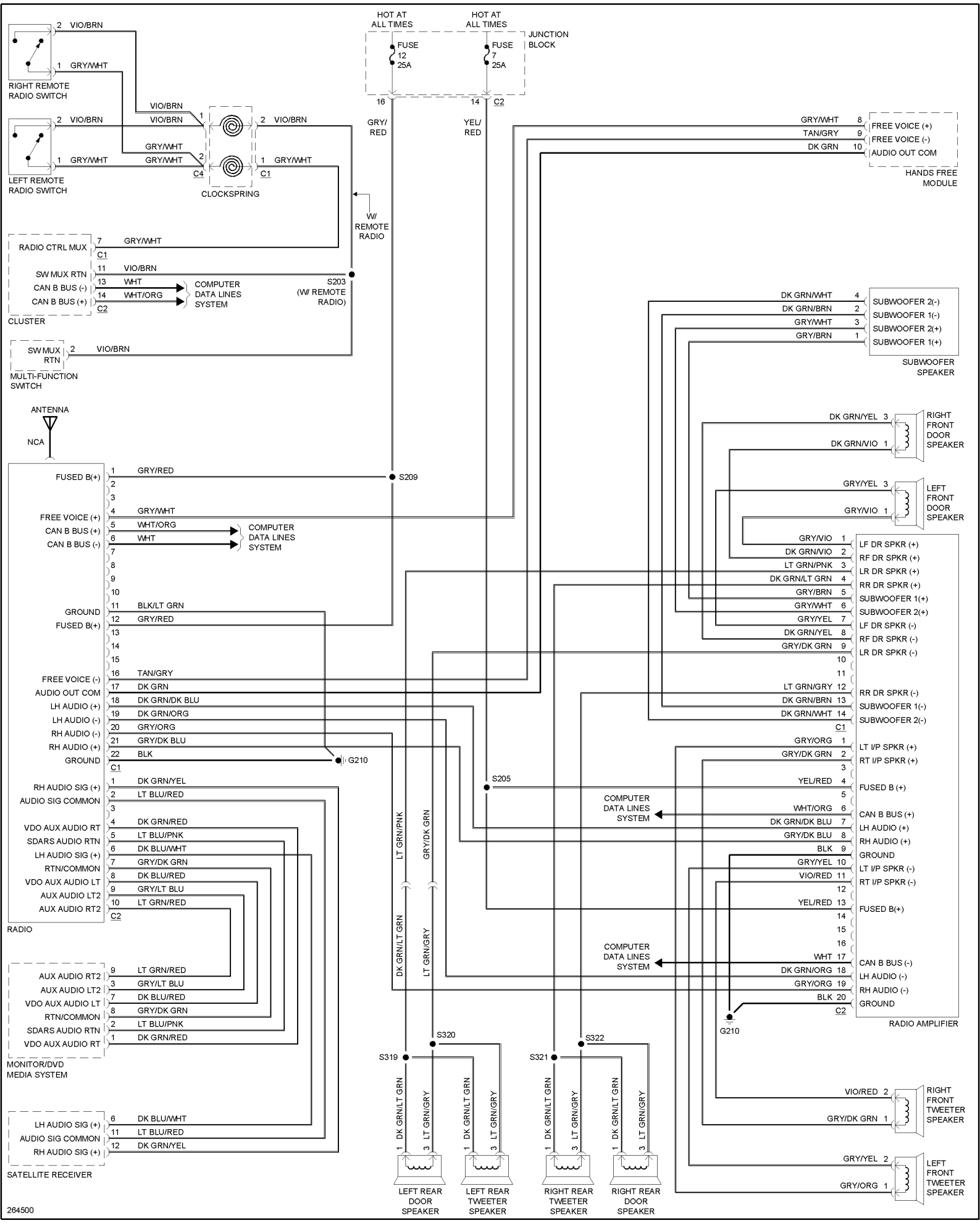
RIGHT REMOTE RADIO SWITCH
LEFT REMOTE RADIO SWITCH
CLOCKSPRING
C4
C1
VIO/BRN
GRY/WHT
HOT AT ALL TIMES
FUSE 12 25A
FUSE 7 25A
JUNCTION BLOCK
16
14
C2
GRY/ RED
YEL/ RED
W/ REMOTE RADIO
RADIO CTRL MUX
SW MUX RTN
CAN B BUS (-)
CAN B BUS (+)
WHT
WHT/ORG
COMPUTER DATA LINES SYSTEM
S203 (W/ REMOTE RADIO)
CLUSTER
MULTI-FUNCTION SWITCH
ANTENNA
NCA
FUSED B(+)
FREE VOICE (+)
GROUND
FREE VOICE (-)
AUDIO OUT COM
LH AUDIO (+)
LH AUDIO (-)
RH AUDIO (-)
RH AUDIO (+)
RH AUDIO SIG (+)
AUDIO SIG COMMON
VDO AUX AUDIO RT
SDARS AUDIO RTN
LH AUDIO SIG (+)
RTN/COMMON
VDO AUX AUDIO LT
AUX AUDIO LT2
AUX AUDIO RT2
RADIO
S209
G210
S205
S320
S319
S321
S322
LT GRN/PNK
GRY/DK GRN
DK GRN/LT GRN
LT GRN/GRY
MONITOR/DVD MEDIA SYSTEM
SATELLITE RECEIVER
HANDS FREE MODULE
SUBWOOFER SPEAKER
SUBWOOFER 2(-)
SUBWOOFER 1(-)
SUBWOOFER 2(+)
SUBWOOFER 1(+)
RIGHT FRONT DOOR SPEAKER
LEFT FRONT DOOR SPEAKER
LF DR SPKR (+)
RF DR SPKR (+)
LR DR SPKR (+)
RR DR SPKR (+)
SUBWOOFER 1(+)
SUBWOOFER 2(+)
LF DR SPKR (-)
RF DR SPKR (-)
LR DR SPKR (-)
RR DR SPKR (-)
SUBWOOFER 1(-)
SUBWOOFER 2(-)
LT I/P SPKR (+)
RT I/P SPKR (+)
FUSED B (+)
CAN B BUS (+)
LH AUDIO (+)
RH AUDIO (+)
GROUND
LT I/P SPKR (-)
RT I/P SPKR (-)
FUSED B(+)
CAN B BUS (-)
LH AUDIO (-)
RH AUDIO (-)
RADIO AMPLIFIER
RIGHT FRONT TWEETER SPEAKER
LEFT FRONT TWEETER SPEAKER
LEFT REAR DOOR SPEAKER
LEFT REAR TWEETER SPEAKER
RIGHT REAR TWEETER SPEAKER
RIGHT REAR DOOR SPEAKER
264500