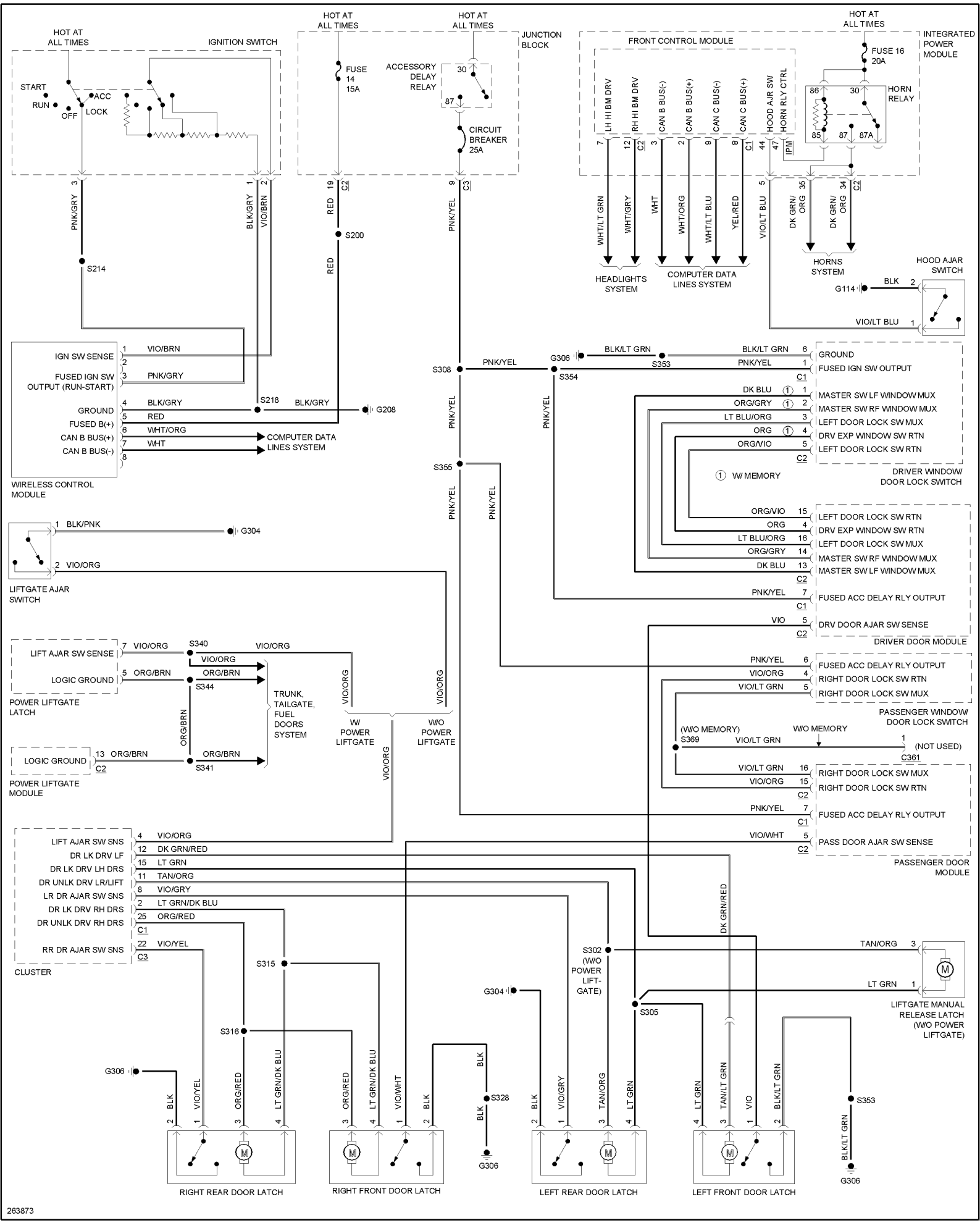
HOT AT ALL TIMES
IGNITION SWITCH
START
RUN
OFF
ACC
LOCK
HOT AT ALL TIMES
FUSE 14 15A
HOT AT ALL TIMES
JUNCTION BLOCK
ACCESSORY DELAY RELAY
30
87
CIRCUIT BREAKER 25A
FRONT CONTROL MODULE
LH HI BM DRV
RH HI BM DRV
CAN B BUS(-)
CAN B BUS(+)
CAN C BUS(-)
CAN C BUS(+)
HOOD AJR SW
HORN RLY CTRL
IPM
HOT AT ALL TIMES
INTEGRATED POWER MODULE
FUSE 16 20A
HORN RELAY
86
30
85
87
87A
PNK/GRY
BLK/GRY
VIO/BRN
RED
PNK/YEL
S214
S200
WHT/LT GRN
WHT/GRY
WHT
WHT/ORG
WHT/LT BLU
YEL/RED
VIO/LT BLU
DK GRN/ ORG
HEADLIGHTS SYSTEM
COMPUTER DATA LINES SYSTEM
HORNS SYSTEM
HOOD AJAR SWITCH
G114
BLK
VIO/LT BLU
IGN SW SENSE
FUSED IGN SW OUTPUT (RUN-START)
GROUND
FUSED B(+)
CAN B BUS(+)
CAN B BUS(-)
VIO/BRN
PNK/GRY
BLK/GRY
RED
WHT/ORG
WHT
S218
G208
COMPUTER DATA LINES SYSTEM
WIRELESS CONTROL MODULE
S308
PNK/YEL
G306
BLK/LT GRN
S353
S354
GROUND
FUSED IGN SW OUTPUT
DK BLU
ORG/GRY
LT BLU/ORG
ORG
ORG/VIO
MASTER SW LF WINDOW MUX
MASTER SW RF WINDOW MUX
LEFT DOOR LOCK SW MUX
DRV EXP WINDOW SW RTN
LEFT DOOR LOCK SW RTN
W/ MEMORY
DRIVER WINDOW/ DOOR LOCK SWITCH
S355
BLK/PNK
G304
VIO/ORG
LIFTGATE AJAR SWITCH
ORG/VIO
ORG
LT BLU/ORG
ORG/GRY
DK BLU
PNK/YEL
VIO
FUSED ACC DELAY RLY OUTPUT
DRV DOOR AJAR SW SENSE
DRIVER DOOR MODULE
LIFT AJAR SW SENSE
LOGIC GROUND
VIO/ORG
ORG/BRN
S340
S344
S341
POWER LIFTGATE LATCH
TRUNK, TAILGATE, FUEL DOORS SYSTEM
W/ POWER LIFTGATE
W/O POWER LIFTGATE
POWER LIFTGATE MODULE
VIO/ORG
VIO/LT GRN
RIGHT DOOR LOCK SW RTN
RIGHT DOOR LOCK SW MUX
PASSENGER WINDOW/ DOOR LOCK SWITCH
(W/O MEMORY)
S369
W/O MEMORY
(NOT USED)
C361
VIO/WHT
PASS DOOR AJAR SW SENSE
PASSENGER DOOR MODULE
LIFT AJAR SW SNS
DR LK DRV LF
DR LK DRV LH DRS
DR UNLK DRV LR/LIFT
LR DR AJAR SW SNS
DR LK DRV RH DRS
DR UNLK DRV RH DRS
RR DR AJAR SW SNS
DK GRN/RED
LT GRN
TAN/ORG
VIO/GRY
LT GRN/DK BLU
ORG/RED
VIO/YEL
CLUSTER
S315
S316
S302 (W/O POWER LIFT-GATE)
S305
TAN/ORG
LT GRN
LIFTGATE MANUAL RELEASE LATCH (W/O POWER LIFTGATE)
G306
BLK
VIO/YEL
ORG/RED
LT GRN/DK BLU
VIO/WHT
S328
VIO/GRY
TAN/ORG
LT GRN
TAN/LT GRN
VIO
BLK/LT GRN
S353
RIGHT REAR DOOR LATCH
RIGHT FRONT DOOR LATCH
LEFT REAR DOOR LATCH
LEFT FRONT DOOR LATCH
263873