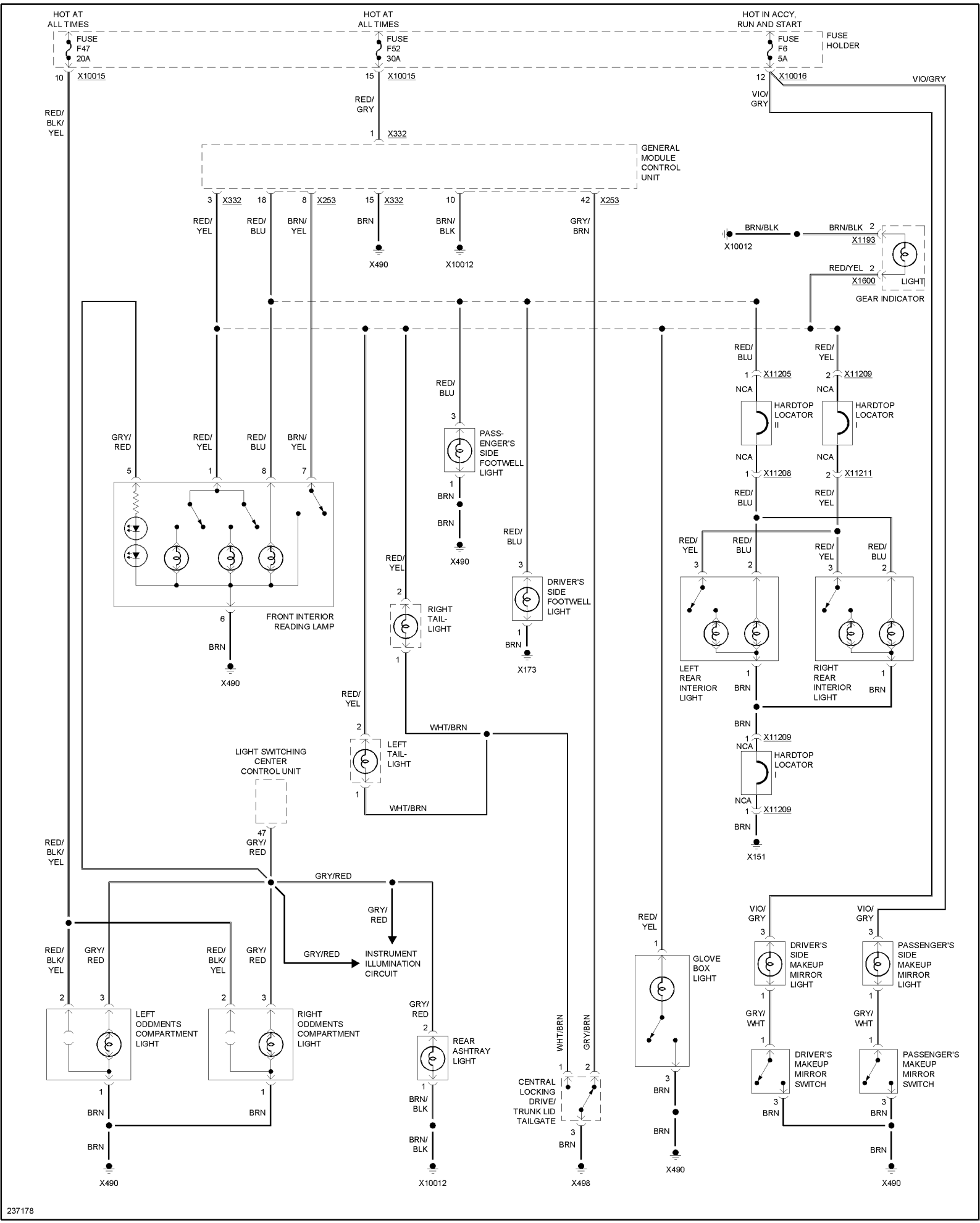
HOT AT ALL TIMES
FUSE F47 20A
HOT AT ALL TIMES
FUSE F52 30A
HOT IN ACCY, RUN AND START
FUSE F6 5A
FUSE HOLDER
X10015
X10016
VIO/GRY
RED/BLK/YEL
RED/GRY
X332
GENERAL MODULE CONTROL UNIT
X253
RED/YEL
RED/BLU
BRN/YEL
BRN
BRN/BLK
GRY/BRN
X490
X10012
BRN/BLK
X1193
RED/YEL
X1600
LIGHT
GEAR INDICATOR
GRY/RED
FRONT INTERIOR READING LAMP
PASS-ENGER'S SIDE FOOTWELL LIGHT
RIGHT TAIL-LIGHT
DRIVER'S SIDE FOOTWELL LIGHT
X173
X11205
X11209
NCA
HARDTOP LOCATOR II
HARDTOP LOCATOR I
X11208
X11211
LEFT REAR INTERIOR LIGHT
RIGHT REAR INTERIOR LIGHT
X151
LEFT TAIL-LIGHT
WHT/BRN
LIGHT SWITCHING CENTER CONTROL UNIT
GRY/RED
INSTRUMENT ILLUMINATION CIRCUIT
LEFT ODDMENTS COMPARTMENT LIGHT
RIGHT ODDMENTS COMPARTMENT LIGHT
REAR ASHTRAY LIGHT
CENTRAL LOCKING DRIVE/ TRUNK LID TAILGATE
GLOVE BOX LIGHT
DRIVER'S SIDE MAKEUP MIRROR LIGHT
PASSENGER'S SIDE MAKEUP MIRROR LIGHT
GRY/WHT
DRIVER'S MAKEUP MIRROR SWITCH
PASSENGER'S MAKEUP MIRROR SWITCH
237178